Wiring Diagram

Commercial 2-ton/5-ton Glycol Chiller

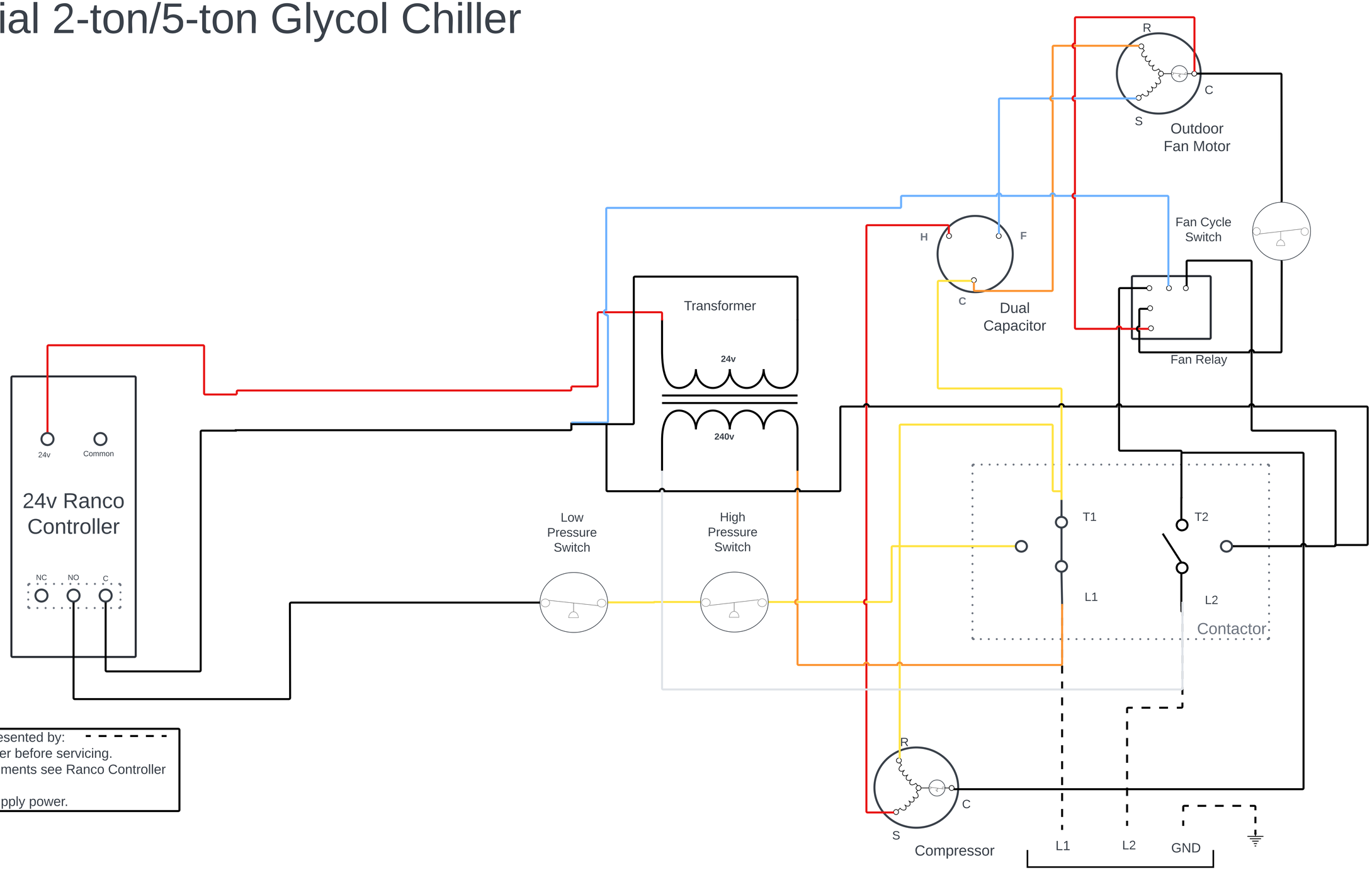

Notes:

1.Field wiring is represented by: - - - - -
2.Disconnect all power before servicing.
3. For power requirements see Ranco Controller Documentation.
4. 208 — 240 Volt supply power.